84265674

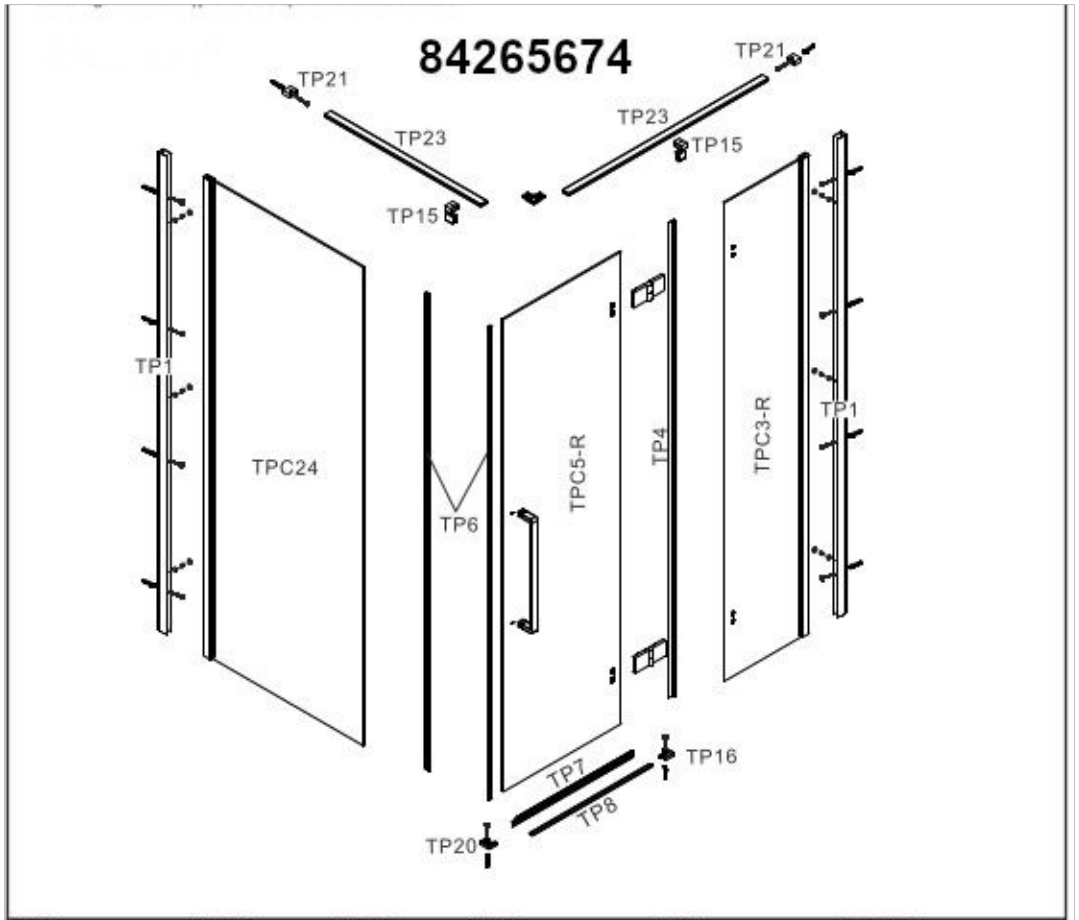
TP21
TP21
TP23
TP23
TP15
TP15
TP1
TPC24
TP6
TPC5-R
TP4
TPC3-R
TP1
TP16
TP7
TP8
TP20

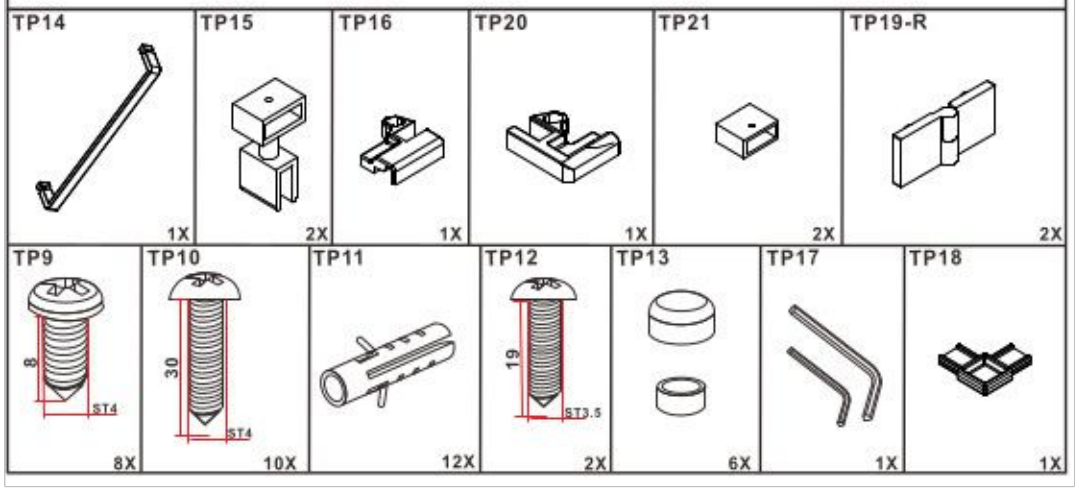
TP14
1X
TP15
2X
TP16
1X
TP20
1X
TP21
2X
TP19-R
2X
TP9
8
ST4
8X
TP10
30
ST4
10X
TP11
12X
TP12
19
ST3.5
2X
TP13
6X
TP17
1X
TP18
1X