Frame packing ADEO -MILO prof 016/30 30x30 (FRAME MILO SILVER /OAK/BLACK/WHITE 30x30 cm INSPIRE)

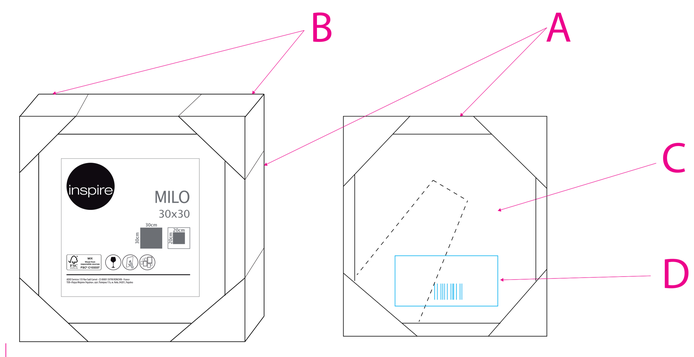

3 pcs

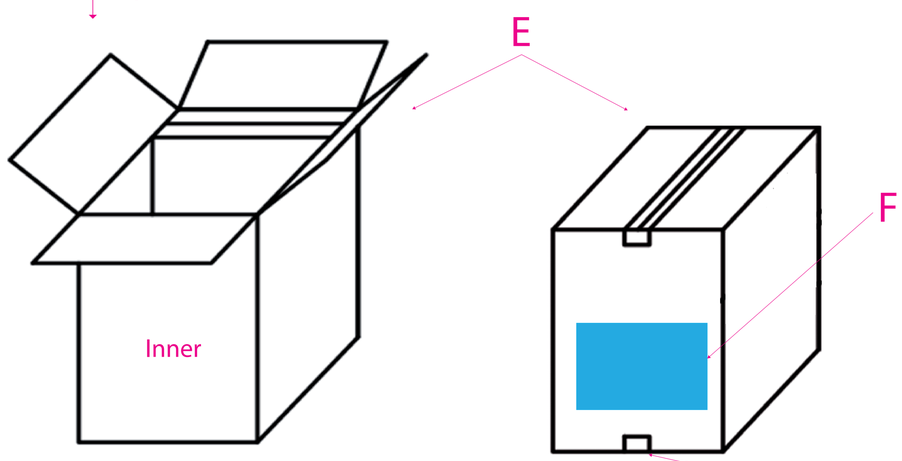

5x Inner

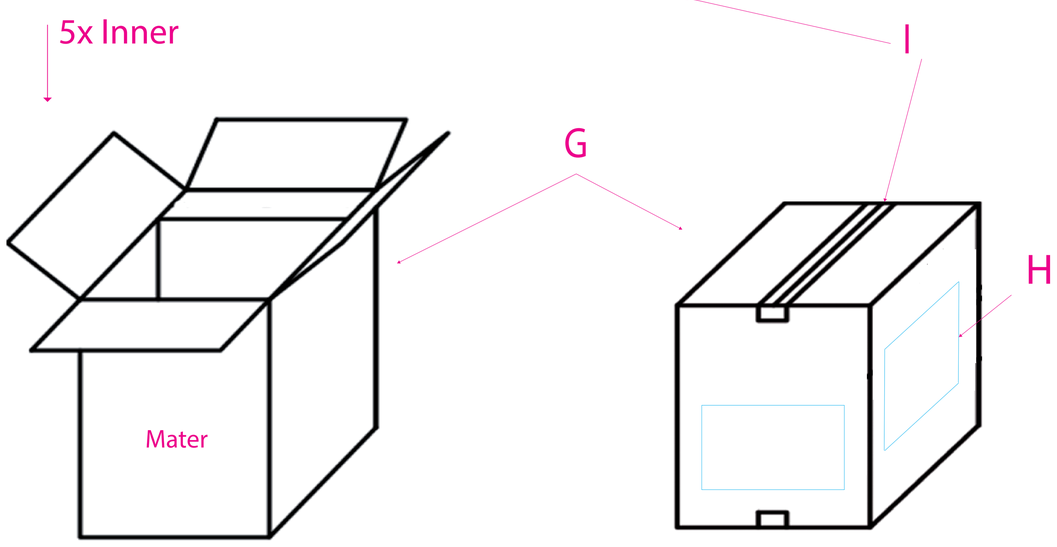

12 x Master

A-Foto frame 30x30 cm
B- 30 cardboard corner (mm) - 4 pcs.
C- Polyolefin film
D- Label 60x100 mm (with frame bar code)
on foil
E- Inner carton Fefco 201 dim. ext. 328x100x328 [mm]
(Inner 30x30) Wave B brown / brown 350g / m2
3 frames in a carton
F - Label 60x100 mm 1 item
G- Master carton Fefco 201 dimensions ext. 342x570x345 [mm]
(Master 30x30) Wave BC brown / brown 650g / m2
5 Inner cartons in a Master carton
H- Label 100x150 mm 2 pcs
I- Tape for gluing cardboard boxes
J- Wooden pallet EPAL 1200 x 800 [mm]
K- Spacers from a plate to be secured
top and bottom of the pallet load
L- Angle of solid cardboard 4 pcs on each side of the pallet
Ł- Teśma PP- for securing pallet load
minimum 2 stripes on each side
M- stretch film - minimum 2 times
N- Label 150x100mm 2 pcs
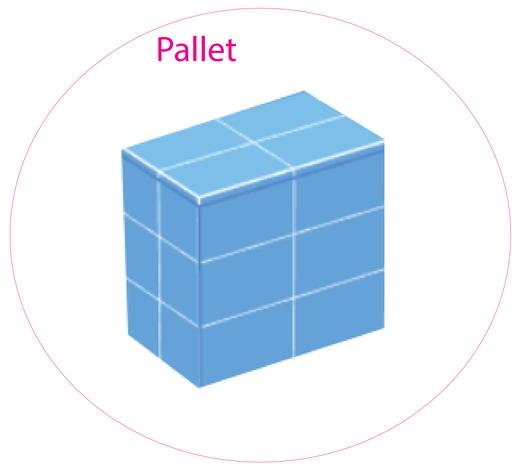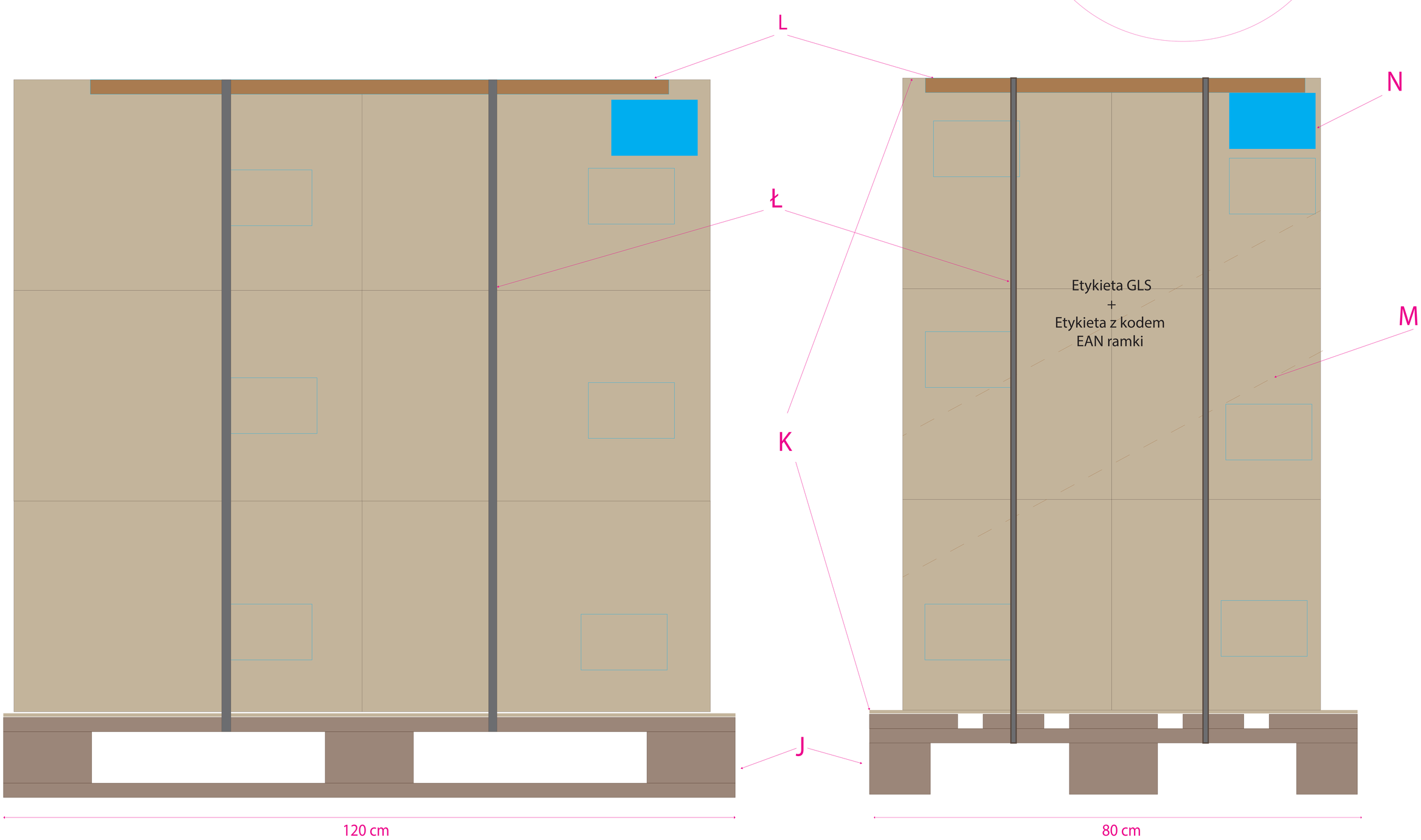
Quantity of product on the pallet 180 pcs.
Quantity of Inner cartons on a pallet 60 pcs
Quantity of Master Cartons on a pallet 12 pcs.